Rotary Drum Screen

YUON CHY TRADING COMPANY LIMITED

1F ,NO.34 ,LIN-SEN LANG WU-LIN LII ,REN-WU DIST ,KAOHSIUNG CITY TAIWAN R.O.C.

TEL:886-7-3713233 FAX:886-7-3731257 E-MAIL:yc2628@ms19.hinet.net

Rotary Drum Screen Machine — Mesh Type

Features

1. With auto clean device, it can preset time to clean the filter screen.
2. Filter screen mesh size. can be selective according to different occasions required.
3. The nozzle is driven by gear box, and its structure is firm & soild.(without having the troubles of steel rope being broken or the disordered filter.)
4. Suitable for solid and liquid separation in waste water.
   ideal applications include building, house, and shopping center.
5. Machine frame is manufactured from SUS#304 for maximum durability.
6. Built-in screen washing design prevents water splashing,while keeping environment clean.
7. Compact construction suitable for mass treatment and restricted space.
8. Replucible mesh screen.

Applications

1. The removing & separating of mass suspension thing, floating thing and sediment of wastewater pre-treatment for unobstructed the post-treatment, reduce post-burden and protecting equipments.
2. For the removing of the dregs and bigger solid of public sewage, city mixed raw sewage and large size wastewater processing station.
3. For the pre-treatment (the impurities' removing & separating) of the river water, tap water, rainwater, groundwater.
4. For the engineering drainage and large size wastewater treatment of the city mixed raw sewage, paper & pulp sewage, leather & tannery sewage, food industry sewage, butchery industry sewage, fiber industry sewage, chemical industry sewage..etc.

Rotary Drum Screen Machine — Mesh Type

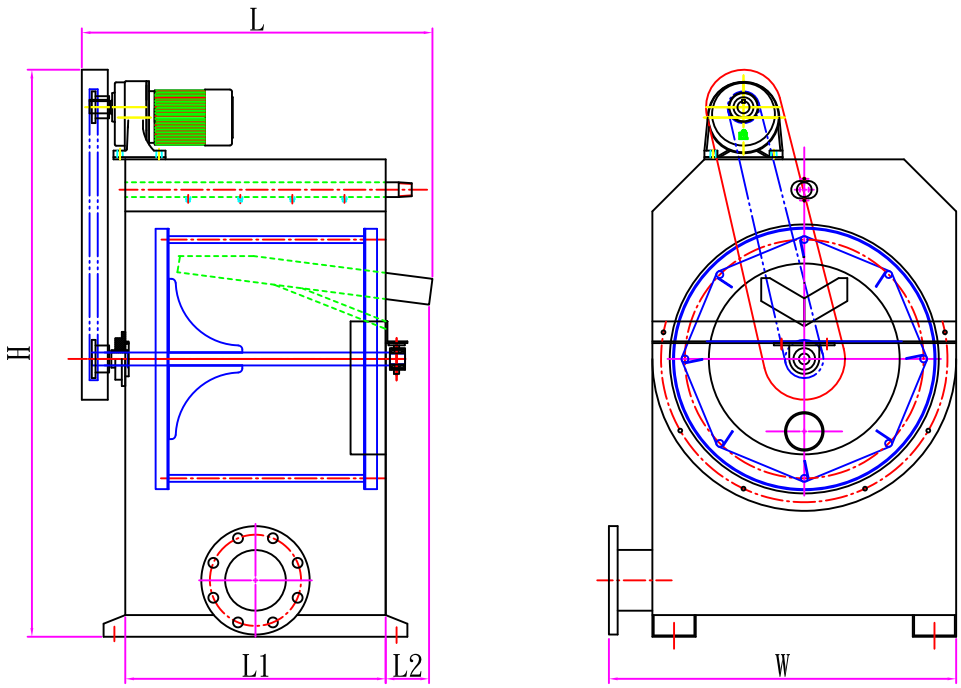

Model & Technical Data

MODEL	RDS-40	RDS-60	RDS-80	RDS-100	RDS-120	RDS-150
Mesh mm2	0.25	0.25	0.25	0.25	0.25	0.25
Capacity m3/hr	20~20	35~40	50~55	65~70	80~85	105~110
L mm	808	808	916	916	1016	1016
W mm	600	800	1000	1200	1400	1700
H mm	1107	1307	1607	1830	2130	2470
L1 mm	600	600	700	700	800	800
L2 mm	100	100	100	100	100	100